(1) Schematic Diagram of A Board

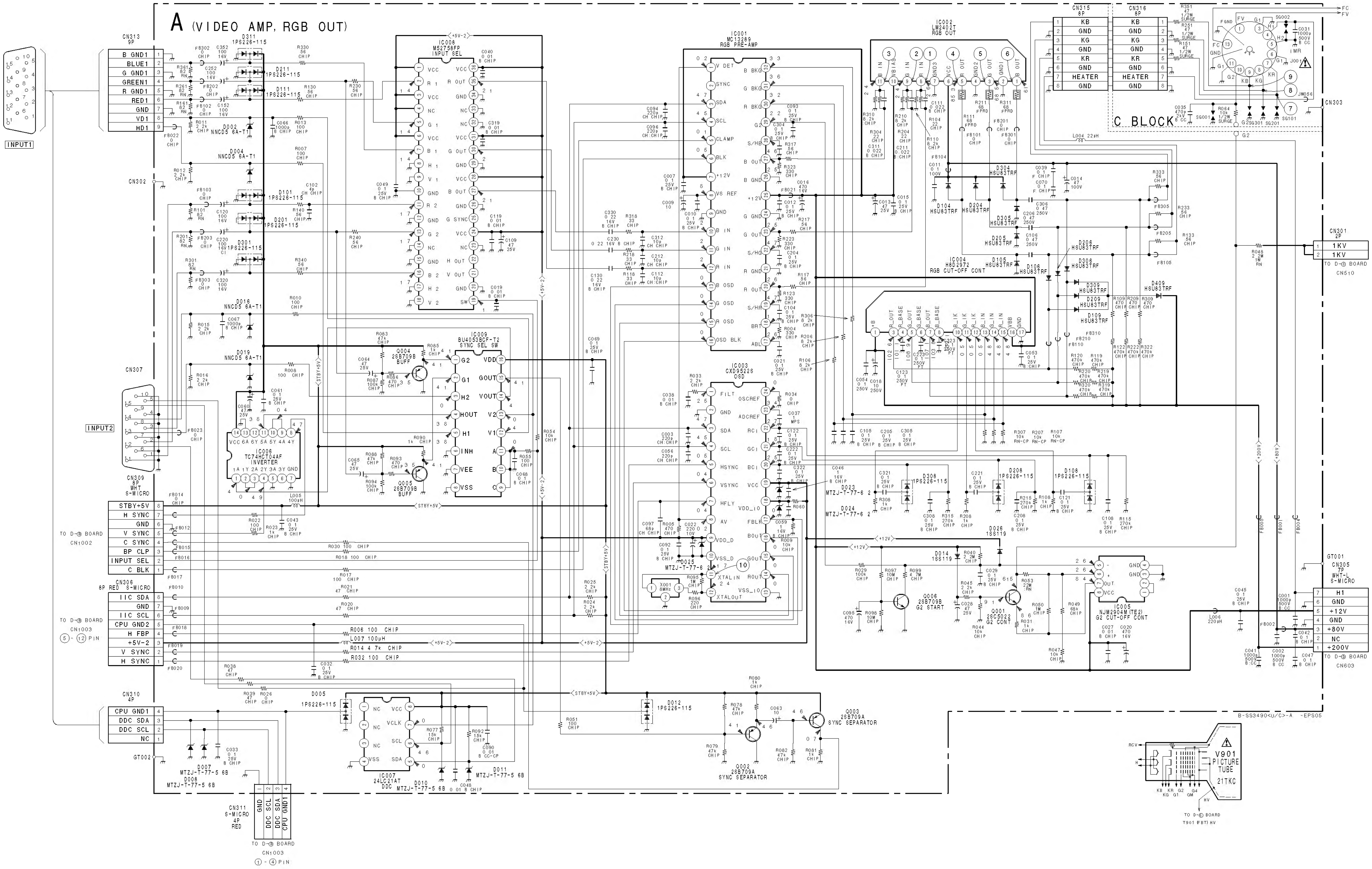
A (VIDEO AMP, RGB OUT)
C BLOCK
INPUT1
INPUT2
CN313 9P
B GND1
BLUE1
G GND1
GREEN1
R GND1
RED1
GND
VD1
HD1
CN302
CN307
CN309 9P WHT S-MICRO
STBY+5V
H SYNC
GND
V SYNC
C SYNC
BP CLP
INPUT SEL
C BLK
TO D-Ⓑ BOARD CN1002
CN306 8P RED S-MICRO
IIC SDA
GND
IIC SCL
CPU GND2
H FBP
+5V-2
V SYNC
H SYNC
TO D-Ⓑ BOARD CN1003 ⑤-⑫PIN
CN310 4P
CPU GND1
DDC SDA
DDC SCL
NC
GT002
CN311 S-MICRO 4P RED
GND
DDC SCL
DDC SDA
CPU GND1
TO D-Ⓑ BOARD CN1003 ①-④PIN
IC008 M52756FP INPUT SEL
IC009 BU4053BCF-T2 SYNC SEL SW
IC006 TC74HCT04AF INVERTER
IC001 MC13289 RGB PRE-AMP
IC003 CXD9522S OSD
IC002 LM2402T RGB OUT
IC004 HBD2972 RGB CUT-OFF CONT
IC005 NJM2904M(TE2) G2 CUT-OFF CONT
IC007 24LC21AT DDC
Q004 2SB709B BUFF
Q005 2SB709B BUFF
Q006 2SB709B G2 START
Q001 2SC5022 G2 CONT
Q002 2SB709A SYNC SEPARATOR
Q003 2SB709A SYNC SEPARATOR
X001 8MHz
CN315 8P
CN316 8P
KB
GND
KG
GND
KR
GND
HEATER
GND
CN301 2P
1KV
1KV
TO D-Ⓑ BOARD CN510
CN305 7P WHT-L S-MICRO
H1
GND
+12V
GND
+80V
NC
+200V
TO D-Ⓑ BOARD CN603
CN303
GT001
V901 PICTURE TUBE 21TKC
TO D-Ⓑ BOARD T901 (FBT) HV
FC
FV
L004 22μH
L006 220μH
B-SS3490<U/C>-A -EPS05

(3) Schematic Diagrams of N, H Boards

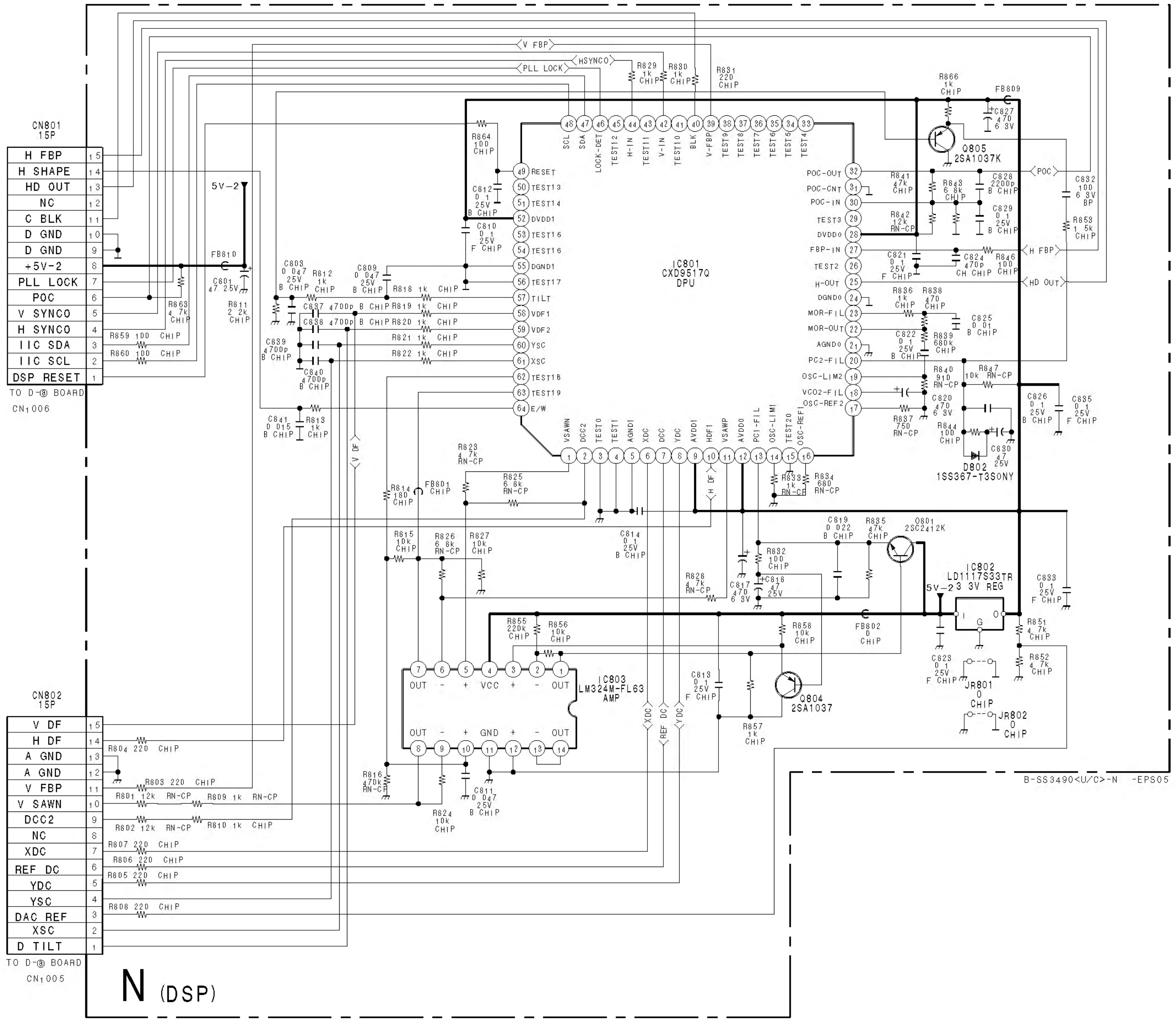
CN801 15P
H FBP 15
H SHAPE 14
HD OUT 13
NC 12
C BLK 11
D GND 10
D GND 9
+5V-2 8
PLL LOCK 7
POC 6
V SYNCO 5
H SYNCO 4
IIC SDA 3
IIC SCL 2
DSP RESET 1
TO D-ⓐ BOARD CN1006
5V-2
FB810
C801 47 25V
R811 2 2k CHIP
R863 4 7k CHIP
R859 100 CHIP
R860 100 CHIP
V FBP
HSYNCO
PLL LOCK
R829 1k CHIP
R830 1k CHIP
R831 220 CHIP
R864 100 CHIP
C812 0 1 25V B CHIP
C810 0 1 25V F CHIP
C808 0 047 25V B CHIP
R812 1k CHIP
C809 0 047 25V B CHIP
R818 1k CHIP
C837 4700p B CHIP
R819 1k CHIP
C838 4700p B CHIP
R820 1k CHIP
C839 4700p B CHIP
R821 1k CHIP
R822 1k CHIP
C840 4700p B CHIP
C841 0 015 B CHIP
R813 1k CHIP
V DF
IC801 CXD9517Q DPU
48 SCL
47 SDA
46 LOCK-DET
45 TEST12
44 H-IN
43 TEST11
42 V-IN
41 TEST10
40 BLK
39 V-FBP
38 TEST9
37 TEST8
36 TEST7
35 TEST6
34 TEST5
33 TEST4
49 RESET
50 TEST13
51 TEST14
52 DVDD1
53 TEST15
54 TEST16
55 DGND1
56 TEST17
57 TILT
58 VDF1
59 VDF2
60 YSC
61 XSC
62 TEST18
63 TEST19
64 E/W
1 VSAWN
2 DCC2
3 TEST0
4 TEST1
5 AGND1
6 XDC
7 DCC
8 YDC
9 AVDD1
10 HDF1
11 VSAWP
12 AVDD0
13 PC1-FIL
14 OSC-LIM1
15 TEST20
16 OSC-REF1
32 POC-OUT
31 POC-CNT
30 POC-IN
29 TEST3
28 DVDD0
27 FBP-IN
26 TEST2
25 H-OUT
24 DGND0
23 MOR-FIL
22 MOR-OUT
21 AGND0
20 PC2-FIL
19 OSC-LIM2
18 VCO2-FIL
17 OSC-REF2
R866 1k CHIP
FB809
C827 470 6 3V
Q805 2SA1037K
R841 47k CHIP
R843 6 8k CHIP
C828 2200p B CHIP
C829 0 1 25V B CHIP
R842 12k RN-CP
POC
C832 100 6 3V BP
R853 1 5k CHIP
H FBP
C821 0 1 25V F CHIP
C824 470p CH CHIP
R846 100 CHIP
HD OUT
R836 1k CHIP
R838 470 CHIP
C825 0 01 B CHIP
C822 0 1 25V B CHIP
R839 680k CHIP
R840 910 RN-CP
R847 10k RN-CP
C820 470 6 3V
R837 750 RN-CP
R844 100 CHIP
C830 47 25V
D802 1SS367-T3SONY
C826 0 1 25V B CHIP
C835 0 1 25V F CHIP
R833 1k RN-CP
R834 680 RN-CP
H DF
R823 4 7k RN-CP
R825 6 8k RN-CP
R814 180 CHIP
FB801 CHIP
C814 0 1 25V B CHIP
R815 10k CHIP
R826 6 8k RN-CP
R827 10k CHIP
R828 4 7k RN-CP
C817 470 6 3V
C818 47 25V
R832 100 CHIP
C819 0 022 B CHIP
R835 47k CHIP
Q801 2SC2412K
IC802 LD1117S33TR 3 3V REG
5V-2
I G O
C833 0 1 25V F CHIP
R851 4 7k CHIP
R852 4 7k CHIP
FB802 0 CHIP
C823 0 1 25V F CHIP
JR801 0 CHIP
JR802 0 CHIP
R855 220k CHIP
R856 10k CHIP
R858 10k CHIP
IC803 LM324M-FL63 AMP
OUT - + VCC + - OUT
OUT - + GND + - OUT
C813 0 1 25V F CHIP
Q804 2SA1037
R857 1k CHIP
XDC
REF DC
YDC
R816 470k RN-CP
R824 10k CHIP
C811 0 047 25V B CHIP
CN802 15P
V DF 15
H DF 14
A GND 13
A GND 12
V FBP 11
V SAWN 10
DCC2 9
NC 8
XDC 7
REF DC 6
YDC 5
YSC 4
DAC REF 3
XSC 2
D TILT 1
TO D-ⓐ BOARD CN1005
R804 220 CHIP
R803 220 CHIP
R801 12k RN-CP
R809 1k RN-CP
R802 12k RN-CP
R810 1k CHIP
R807 220 CHIP
R806 220 CHIP
R805 220 CHIP
R808 220 CHIP
N (DSP)
B-SS3490<U/C>-N -EPS05

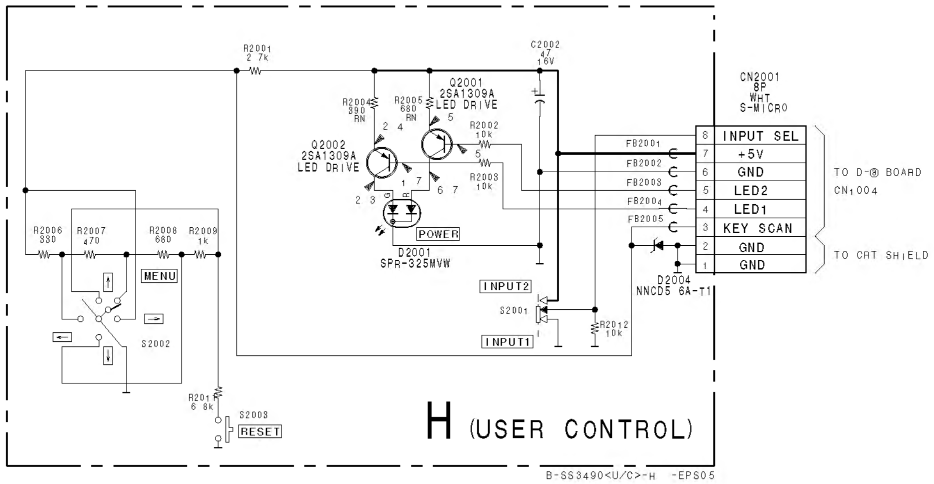
R2001 2 7k
C2002 47 16V
Q2001 2SA1309A LED DRIVE
Q2002 2SA1309A LED DRIVE
R2004 390 RN
R2005 680 RN
R2002 10k
R2003 10k
D2001 SPR-325MVW
POWER
CN2001 8P WHT S-MICRO
FB2001
FB2002
FB2003
FB2004
FB2005
8 INPUT SEL
7 +5V
6 GND
5 LED2
4 LED1
3 KEY SCAN
2 GND
1 GND
TO D-ⓐ BOARD CN1004
TO CRT SHIELD
D2004 NNCD5 6A-T1
R2006 330
R2007 470
R2008 680
R2009 1k
MENU
S2002
INPUT2
S2001
INPUT1
R2012 10k
R2011 6 8k
S2003
RESET
H (USER CONTROL)
B-SS3490<U/C>-H -EPS05

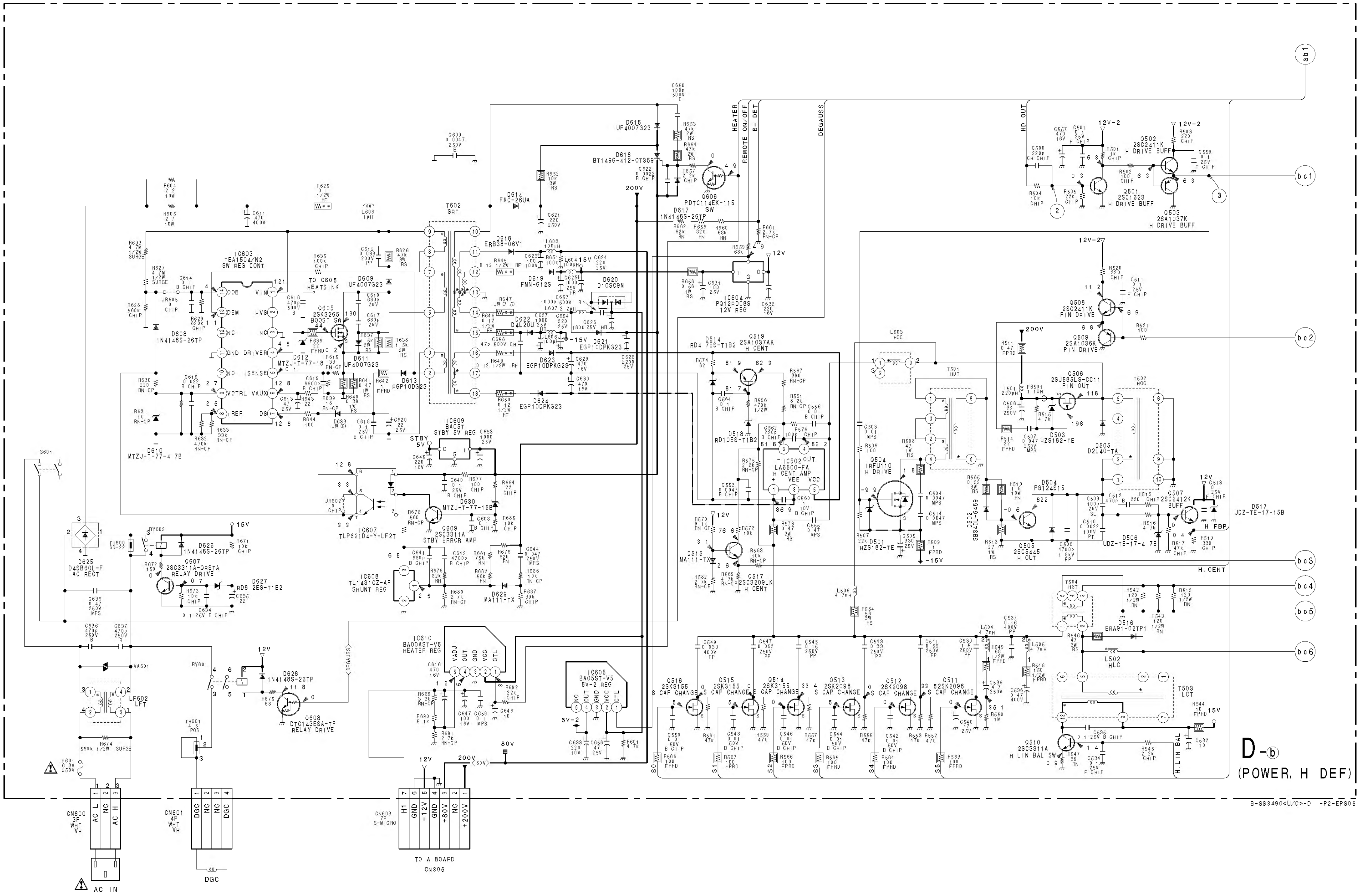
IC603 TEA1504/N2 SW REG CONT
T602 SRT
IC604 PQ12RD08S 12V REG
IC609 BA05T STBY 5V REG
IC607 TLP621D4-Y-LF2T
IC608 TL1431CZ-AP SHUNT REG
IC610 BA00AST-V5 HEATER REG
IC605 BA05ST-V5 5V-2 REG
IC502 LA6500-FA H CENT AMP
Q605 2SK3265 BOOST SW
Q606 PDTC114EK-115 SW
Q607 2SC3311A-QRSTA RELAY DRIVE
Q608 DTC143ESA-TP RELAY DRIVE
Q609 2SC3311A STBY ERROR AMP
Q501 2SC1623 H DRIVE BUFF
Q502 2SC2411K H DRIVE BUFF
Q503 2SA1037K H DRIVE BUFF
Q504 IRFU110 H DRIVE
Q505 2SC5445 H OUT
Q506 2SJ585LS-CC11 PIN OUT
Q507 2SC2412K BUFF
Q508 2SC2411K PIN DRIVE
Q509 2SA1036K PIN DRIVE
Q510 2SC3311A H LIN BAL SW
Q511 2SK2098 S CAP CHANGE
Q512 2SK2098 S CAP CHANGE
Q513 2SK2098 S CAP CHANGE
Q514 2SK3155 S CAP CHANGE
Q515 2SK3155 S CAP CHANGE
Q516 2SK3155 S CAP CHANGE
Q517 2SC3209LK H CENT
Q519 2SA1037AK H CENT
D625 D4SB60L-F AC RECT
T501 HDT
T502 HOC
T503 LCT
T504 HST
L502 HLC
L503 HCC
LF602 LFT
RY601
RY602
S601
F601 6.3A 250V
HEATER
REMOTE ON/OFF
B+ DET
DEGAUSS
HD OUT
H.CENT
H.LIN BAL
H FBP
200V
12V
15V
-15V
80V
12V-2
5V-2
ab1
bc1
bc2
bc3
bc4
bc5
bc6
CN600 3P WHT VH
AC L
NC
AC H
AC IN
CN601 4P WHT VH
DGC
NC
NC
DGC
DGC
CN603 7P S-MICRO
H1
GND
+12V
GND
+80V
NC
+200V
TO A BOARD CN306

D-ⓑ
(POWER, H DEF)

B-SS3490<U/C>-D -P2-EPS06

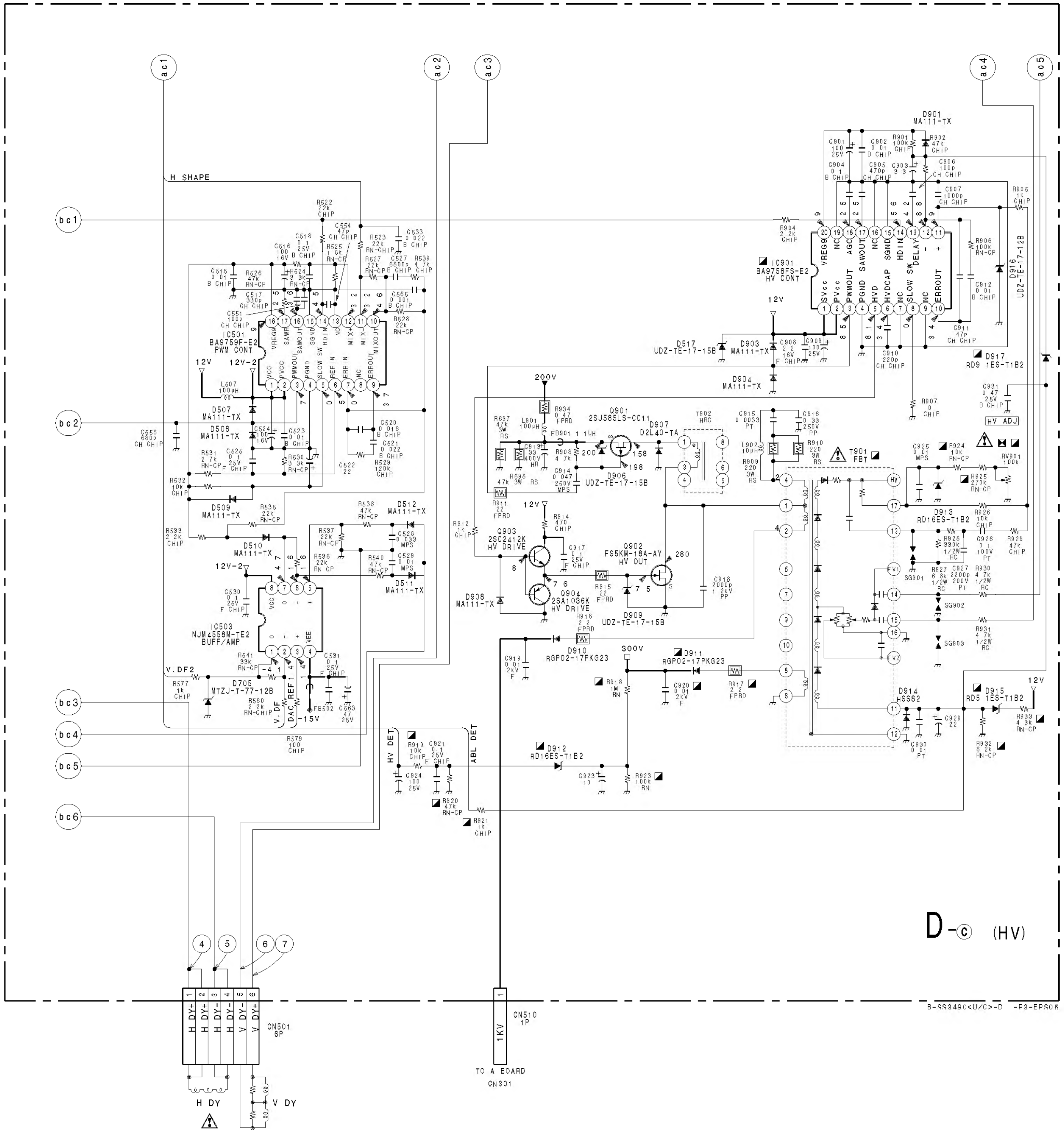
ac1
ac2
ac3
ac4
ac5
bc1
bc2
bc3
bc4
bc5
bc6
H SHAPE
IC501
BA9759F-E2
PWM CONT
VREG
SAW
SAWOUT
SGND
HDIN
MIX
MIXOUT
VCC
PVCC
PWMOUT
PGND
SLOW SW
REFIN
ERRIN
NC
ERROUT
12V
12V-2
L507
100μH
D507
MA111-TX
D508
MA111-TX
D509
MA111-TX
D510
MA111-TX
D511
MA111-TX
D512
MA111-TX
IC503
NJM4556M-TE2
BUFF/AMP
D705
MTZJ-T-77-12B
V.DF2
V.DF
DAC
REF
-15V
FB502
IC901
BA9758FS-E2
HV CONT
VREG
NC
AGC
SAWOUT
SGND
HDIN
DELAY
SVcc
PVcc
PWMOUT
PGND
HVD
HVDCAP
SLOW SW
ERROUT
D901
MA111-TX
D903
MA111-TX
D904
MA111-TX
D517
UDZ-TE-17-15B
D916
UDZ-TE-17-12B
D917
RD9.1ES-T1B2
HV ADJ
200V
Q901
2SJ585LS-CC11
D907
D2L40-TA
T902
HRC
L901
100μH
FB901
D906
UDZ-TE-17-15B
Q903
2SC2412K
HV DRIVE
Q904
2SA1036K
HV DRIVE
Q902
FS5KM-18A-AY
HV OUT
D908
MA111-TX
D909
UDZ-TE-17-15B
D910
RGP02-17PKG23
300V
D911
RGP02-17PKG23
T901
FBT
HV
D913
RD16ES-T1B2
SG901
SG902
SG903
RV901
100k
D914
HSS82
D915
RD5.1ES-T1B2
HV DET
ABL DET
D912
RD16ES-T1B2
CN501
6P
H DY+
H DY+
H DY-
H DY-
V DY-
V DY+
H DY
V DY
CN510
1P
1KV
TO A BOARD
CN301
④
⑤
⑥
⑦

D-ⓒ (HV)

B-SS3490<U/C>-D -P3-EPS05

(2) Schematic Diagrams of D (ⓐ, ⓑ, ⓒ) Board

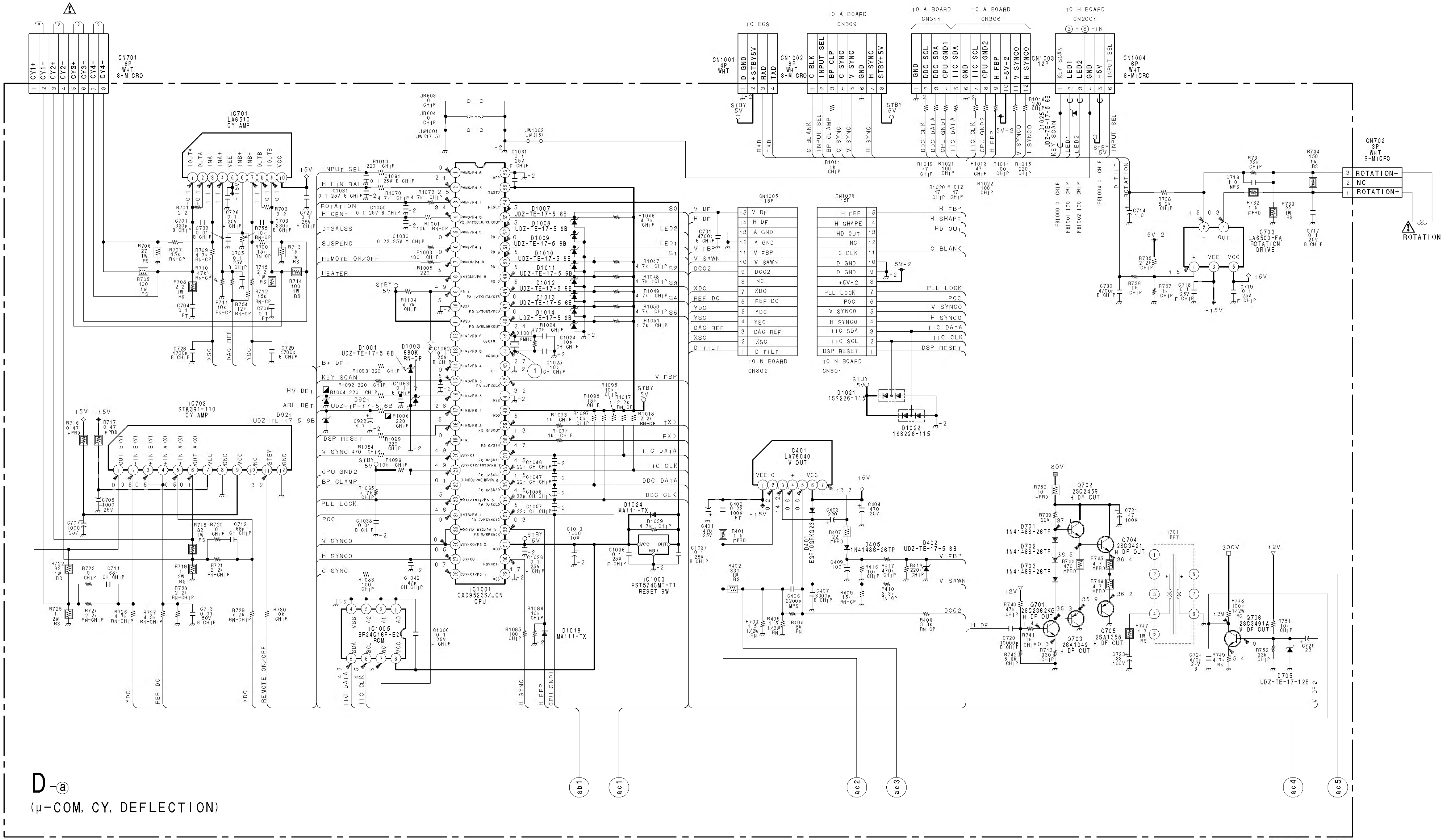
CN701 8P WHT S-MICRO
CY1+
CY1-
CY2+
CY2-
CY3+
CY3-
CY4+
CY4-
IC701 LA6510 CY AMP
IC702 STK391-110 CY AMP
IC1001 CXD9523S/JCN CPU
IC1005 BR24C16F-E2 ROM
IC1003 PST574CMT-T1 RESET SW
IC401 LA78040 V OUT
IC703 LA6500-FA ROTATION DRIVE
CN1001 4P WHT
TO ECS
CN1002 8P WHT S-MICRO
TO A BOARD CN309
TO A BOARD CN311
TO A BOARD CN306
CN1003 12P
TO H BOARD CN2001
CN1004 6P WHT S-MICRO
CN702 3P WHT S-MICRO
ROTATION-
NC
ROTATION+
ROTATION
CN1005 15P
TO N BOARD CN602
CN1006 15P
TO N BOARD CN601
INPUT SEL
H LIN BAL
ROTATION
H CENT
DEGAUSS
SUSPEND
REMOTE ON/OFF
HEATER
B+ DET
KEY SCAN
HV DET
ABL DET
DSP RESET
V SYNC
CPU GND2
BP CLAMP
PLL LOCK
POC
V SYNCO
H SYNCO
C SYNC
Q702 2SC2459 H DF OUT
Q704 2SC3421 H DF OUT
Q701 2SC2362KG H DF OUT
Q703 2SA1049 H DF OUT
Q705 2SA1358 H DF OUT
Q706 2SC3491A V DF OUT
T701 DFT
D1021 1SS226-115
D1022 1SS226-115
D1024 MA111-TX
D1018 MA111-TX
ab1
ac1
ac2
ac3
ac4
ac5

D-ⓐ
(μ-COM, CY, DEFLECTION)

B-SS3490<U/C>-D -PI-EPS05